

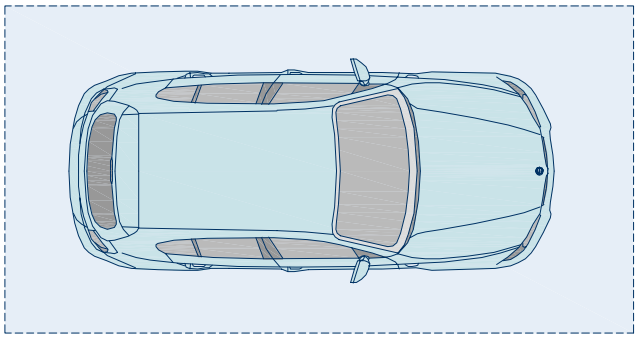

SECURITY CARSPACE

APPROXIMATE AREAS	
Internal Floorspace	60sqm
Balcony	8sqm
Total	**68sqm**

OUTGOINGS	
Council Rates	$270 pq
Water Rates	$163 pq
Strata Levies	$925 pq

Balmain
109/85 Reynolds Street

DISCLAIMER: This information has been prepared as a guide only. The vendor and the real estate agent, Balmain Real Estate Pty Ltd and/or Balmain Estate Agency Pty Ltd (trading as Cobden & Hayson), make no warranties as to its accuracy and all interested parties must rely on their own enquiries.

cobden & hayson