CobdenHayson.

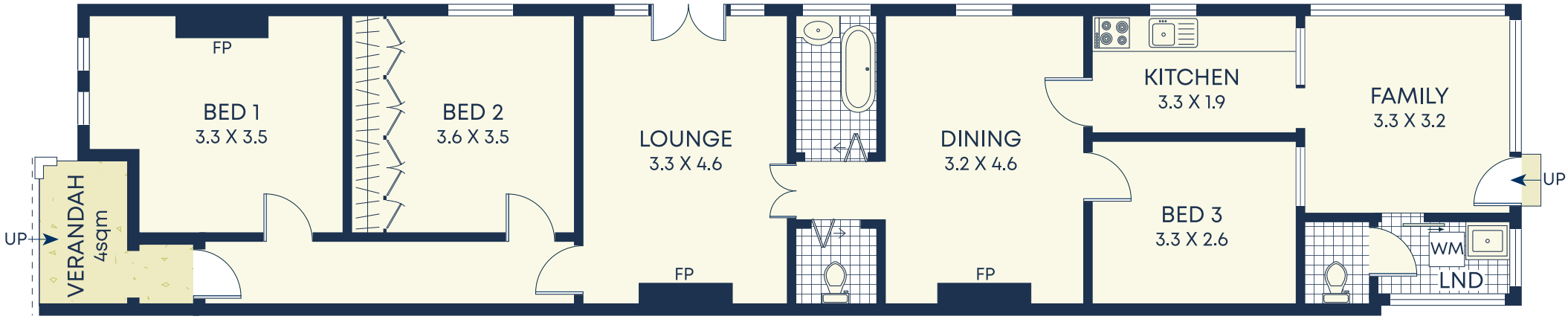

Ground

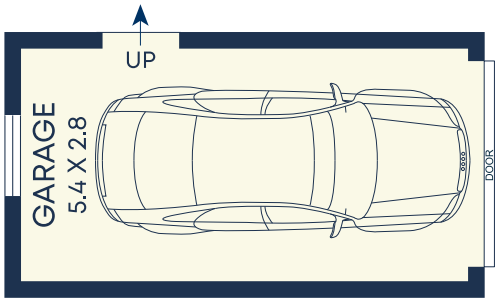

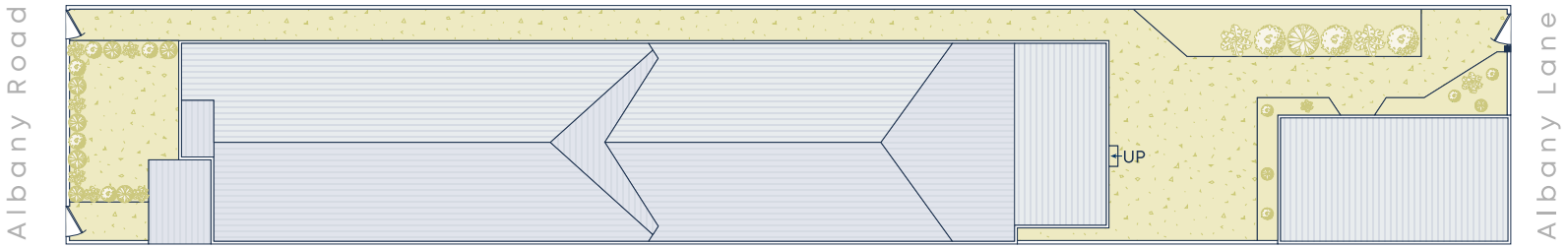

Site plan

Size (approx)

- Internal 103sqm
- Garage 15sqm
- External 103sqm
- Land Size 221sqm

Outgoings

- Water Rates $229p/q
- Council Rates $528p/q

DISCLAIMER: This information has been prepared as a guide only. The vendor and the real estate agent, Annandale Agency Management Pty Ltd (trading as Cobden & Hayson Annandale), make no warranties as to its accuracy and all interested parties must rely on their own enquiries.