CobdenHayson.

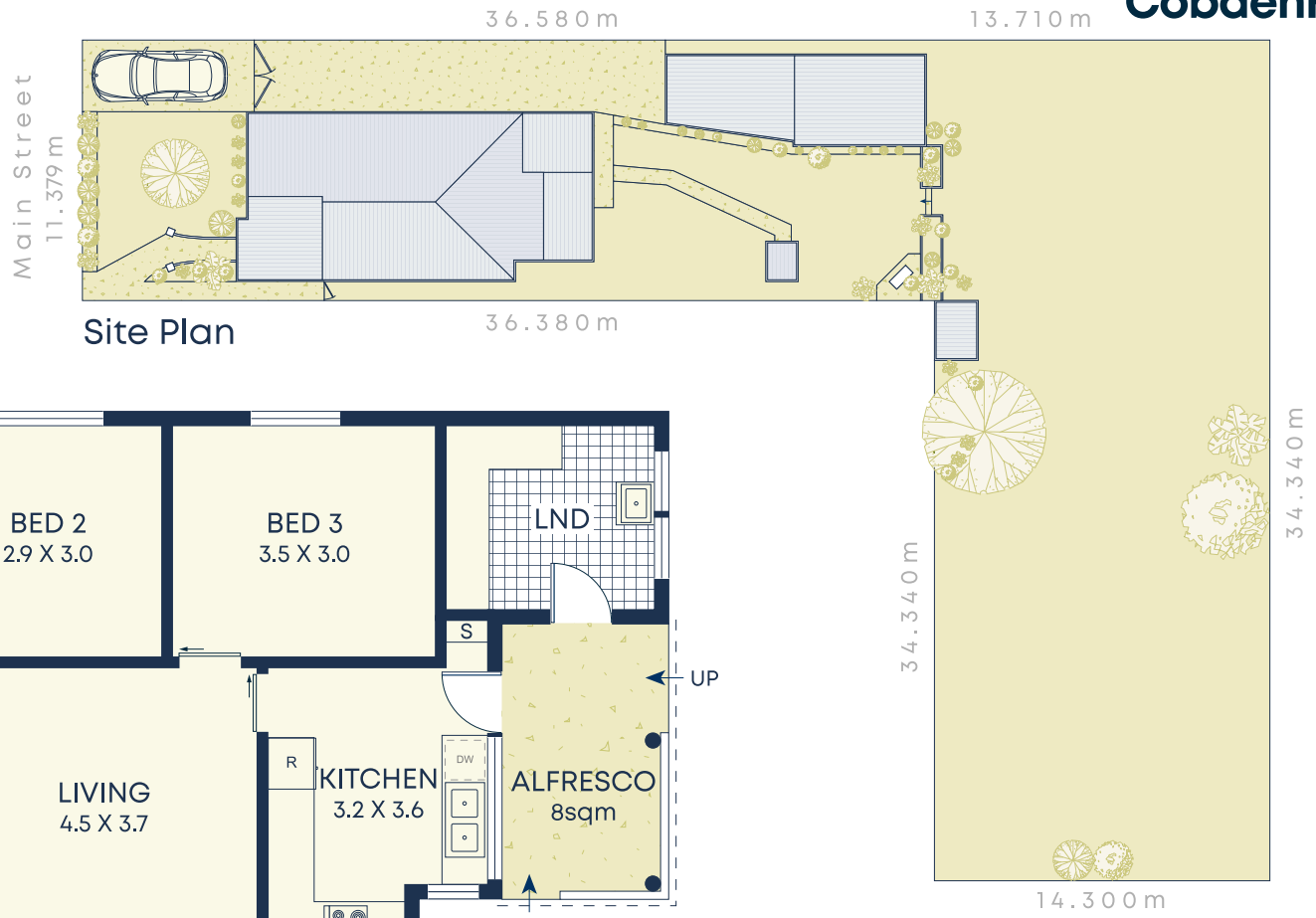

Site Plan

Ground

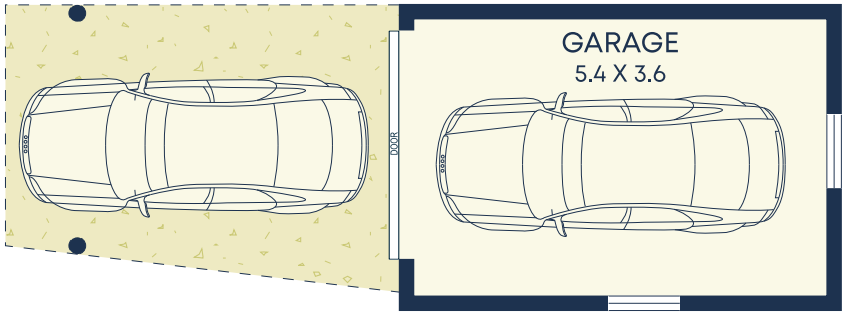

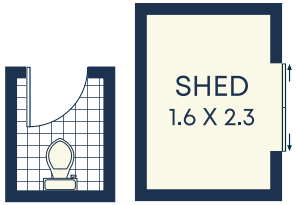

Size (approx)

- Internal 77sqm
- Garage 19sqm
- External 796sqm
- Total Lot Size 891sqm

Outgoings

- Water Rates $192p/q
- Council Rates $693p/q

This information has been prepared as a guide only.
The vendor and the real estate agent, Richards and Pty Ltd
The IW Agency Pty Ltd trading as Cobden & Hayson Earlwood/Marrickville.
ABN 14 615 763 481 make no warranties as to its accuracy and
all interested parties must rely on their own enquiries.