CobdenHayson.

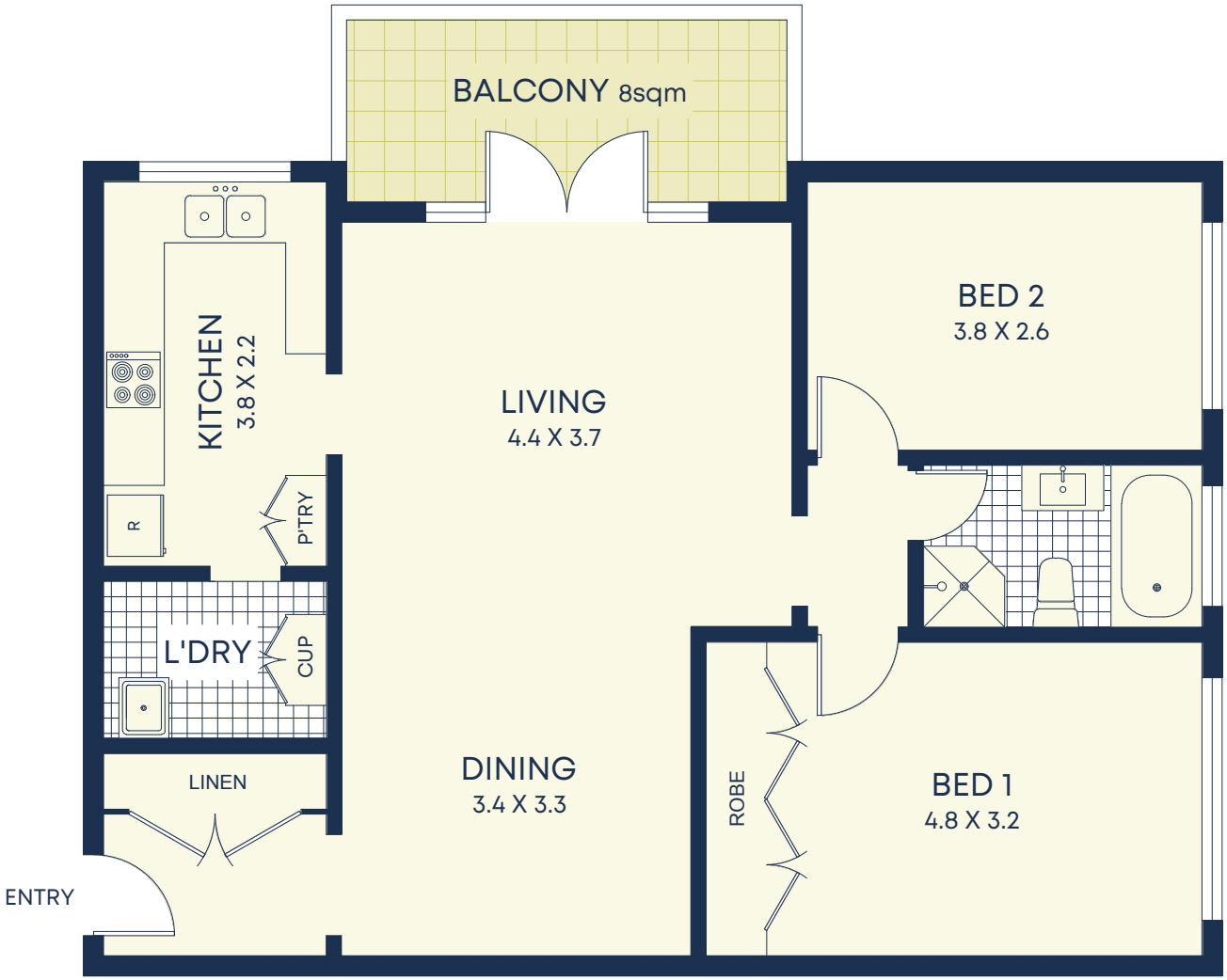

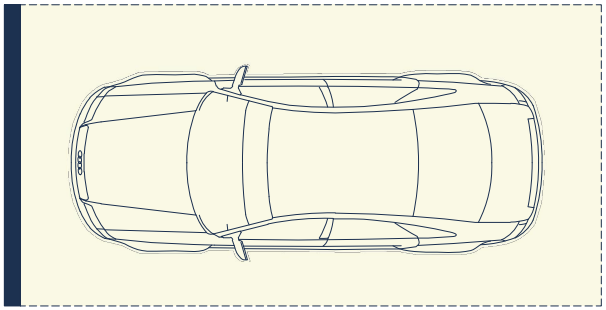

COVERED CARSPACE

Size (approx)

- Apartment 90sqm
- Parking 14sqm
- Total 104sqm

Outgoings

- Council Rates $235p/q
- Water Rates $152p/q
- Strata Rates $661p/q

DISCLAIMER: This information has been prepared as a guide only. The vendor and the real estate agent, Drummoyne Estate Agency Management Pty Ltd (trading as Cobden & Hayson Drummoyne), make no warranties as to its accuracy and all interested parties must rely on their own enquiries.