CobdenHayson.

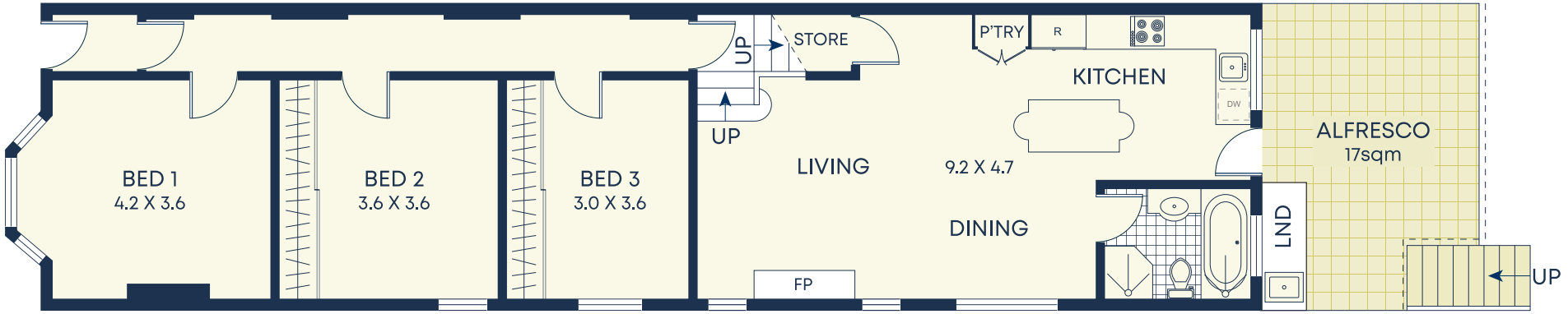

Ground

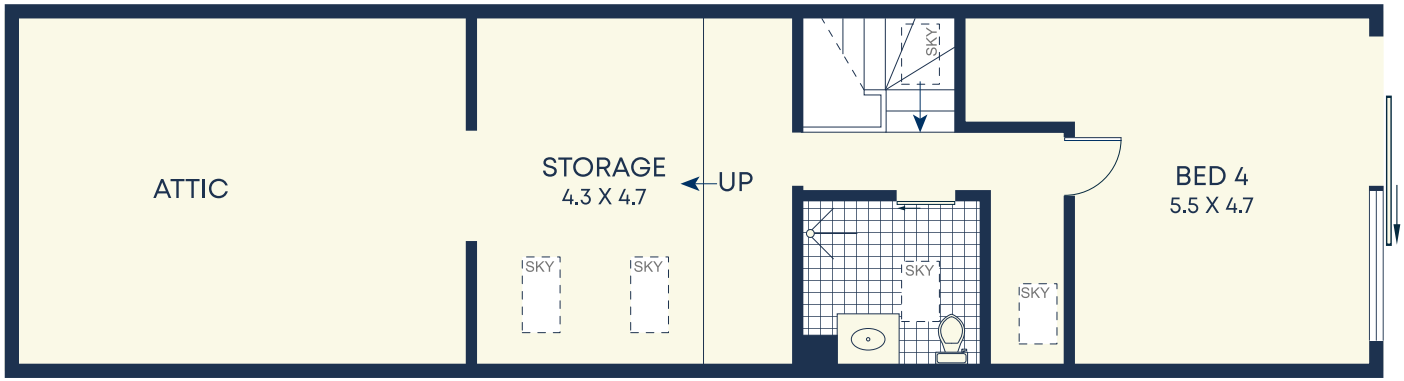

First

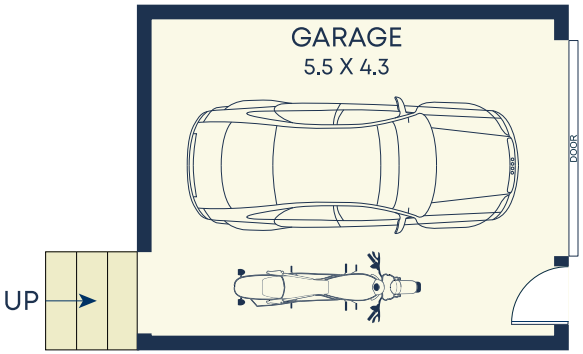

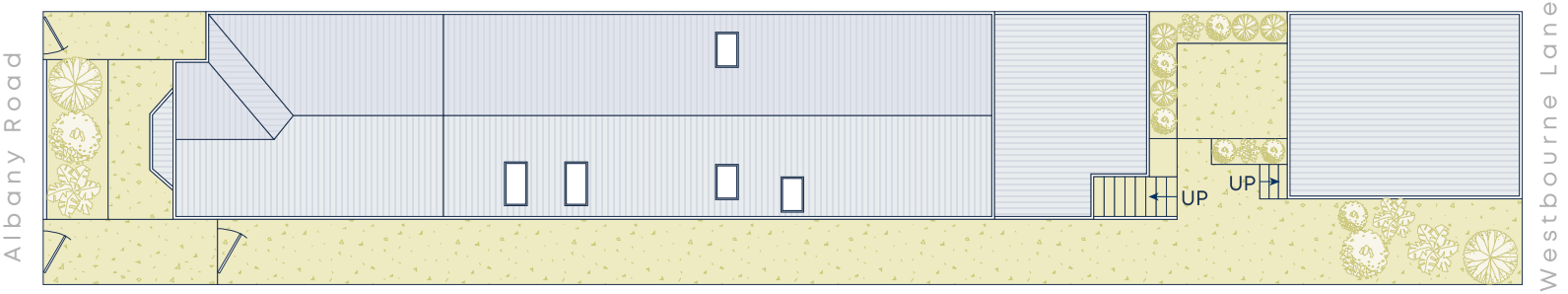

Site plan

Size (approx)

- Internal 189sqm
- Garage 24sqm
- External 131sqm
- Land Size 228sqm

Outgoings

- Water Rates $193p/q
- Council Rates $510p/q

DISCLAIMER: This information has been prepared as a guide only. The vendor and the real estate agent, Annandale Agency Management Pty Ltd (trading as Cobden & Hayson Annandale), make no warranties as to its accuracy and all interested parties must rely on their own enquiries.