CobdenHayson.

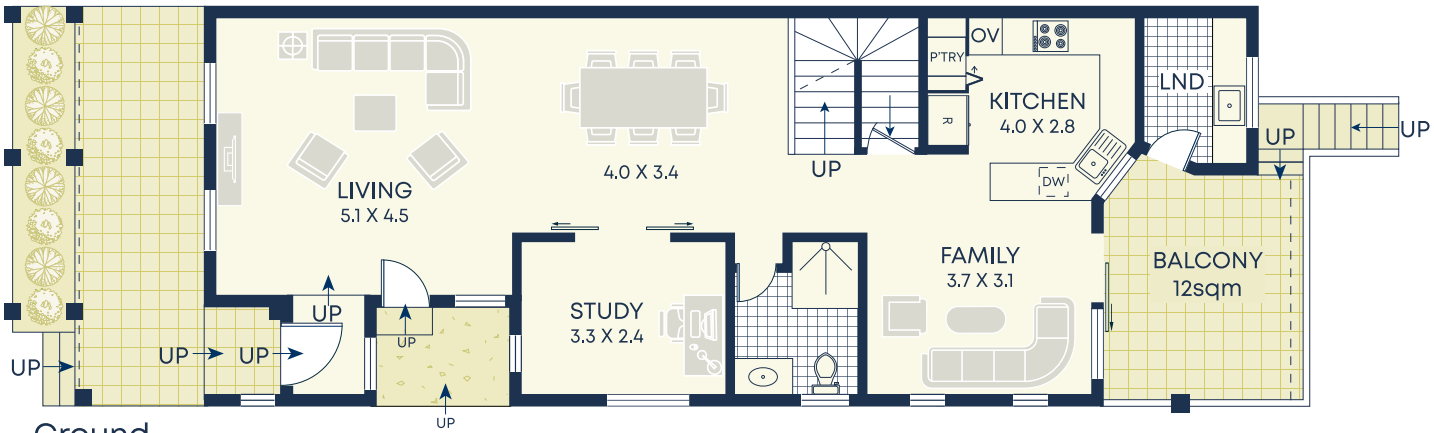

Ground

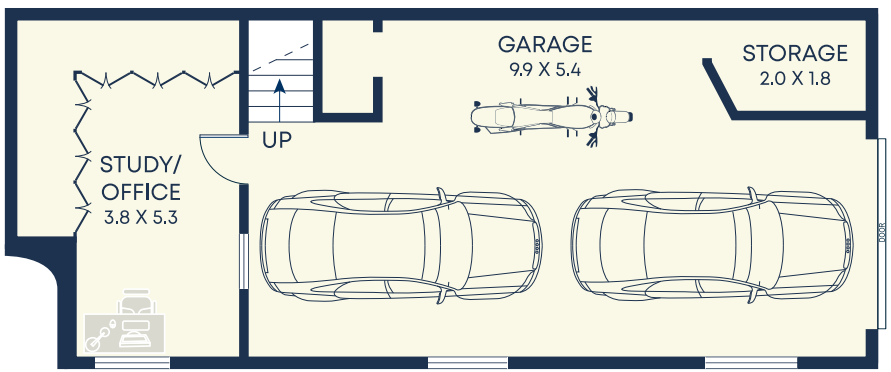

Lower

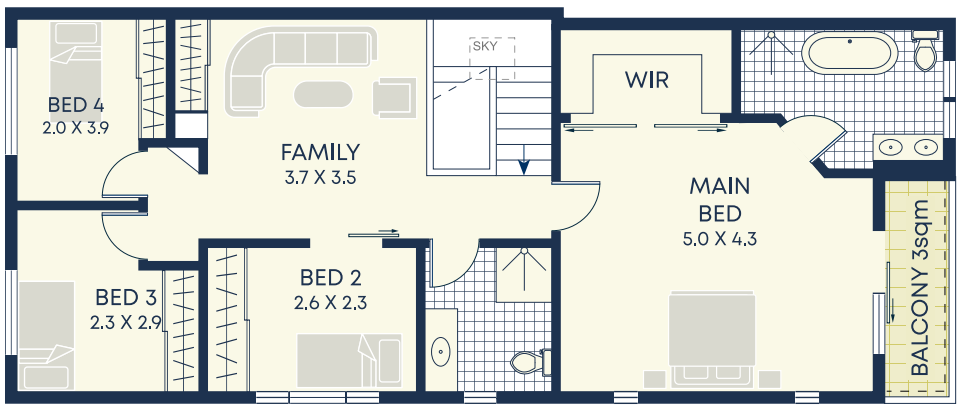

Upper

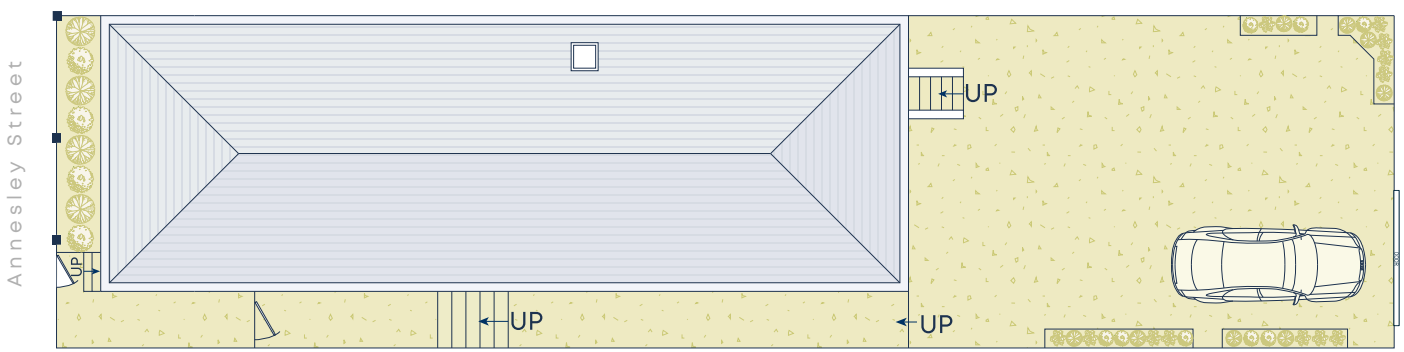

Site Plan

Size (approx)

- Internal 188sqm
- Garage 50sqm
- External 181sqm
- Land Size 278sqm

Outgoings

- Water Rates $193p/q
- Council Rates $533p/q

DISCLAIMER: This information has been prepared as a guide only. The vendor and the real estate agent, Annandale Agency Management Pty Ltd (trading as Cobden & Hayson Annandale), make no warranties as to its accuracy and all interested parties must rely on their own enquiries.