CobdenHayson.

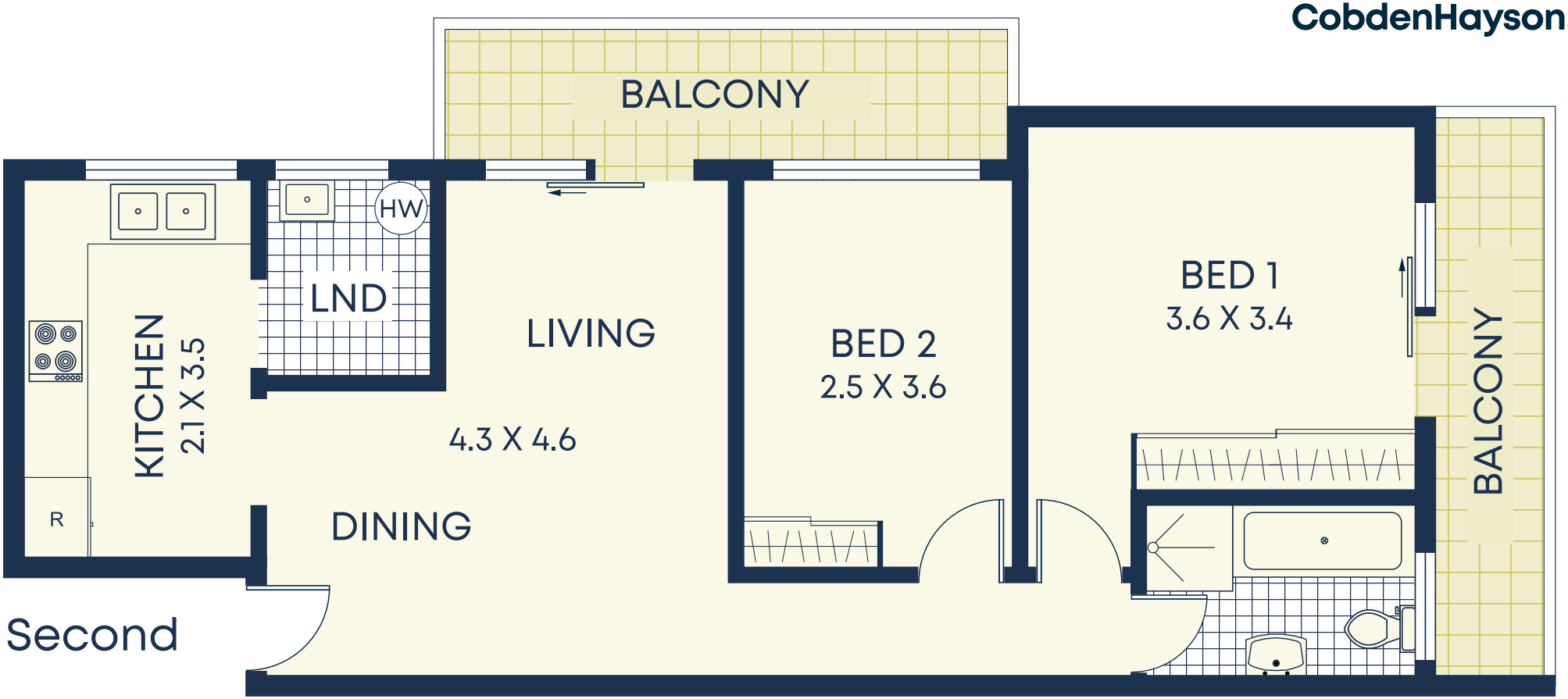

Second

CAR SPACE
5.3 X 2.3

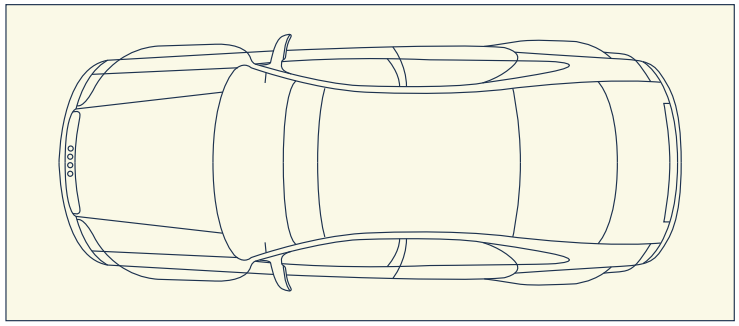

Ground

Size (approx)

- Internal 59sqm
- Carspace 12sqm
- External 11sqm
- Total Area 82sqm

Outgoings

- Water Rates $200p/q
- Council Rates $353p/q
- Strata Rates $751p/q

DISCLAIMER: This information has been prepared as a guide only. The vendor and the real estate agent, Annandale Agency Management Pty Ltd (trading as Cobden & Hayson Annandale), make no warranties as to its accuracy and all interested parties must rely on their own enquiries.