CobdenHayson.

Ground



First

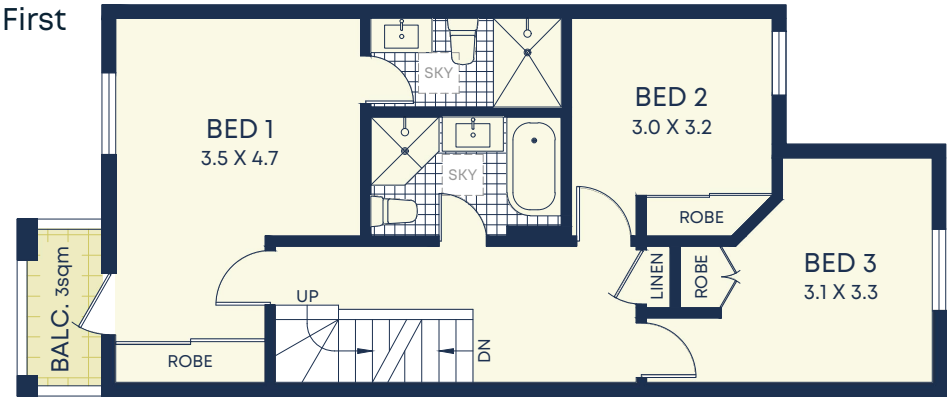

Second



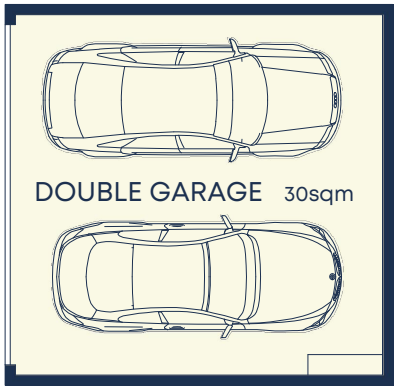

Basement

Size (approx)

- Internal 136sqm
- Garage 30sqm
- External 59sqm
- Total 225sqm
- Storage 19sqm

Outgoings

- Council Rates $303p/q
- Water Rates $285p/q
- Strata Rates $850p/q

DISCLAIMER: This information has been prepared as a guide only. The vendor and the real estate agent, Annandale Agency Management Pty Ltd (trading as Cobden & Hayson Annandale), make no warranties as to its accuracy and all interested parties must rely on their own enquiries.