CobdenHayson.

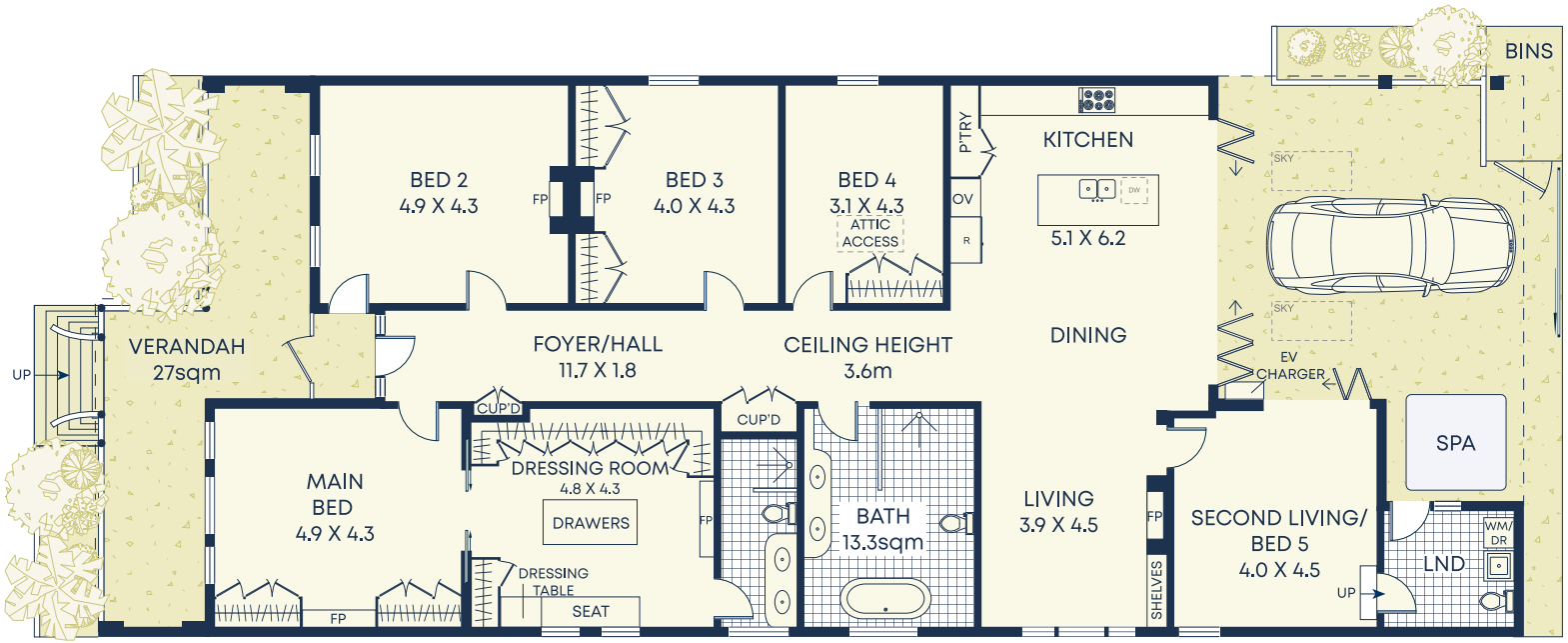

Ground

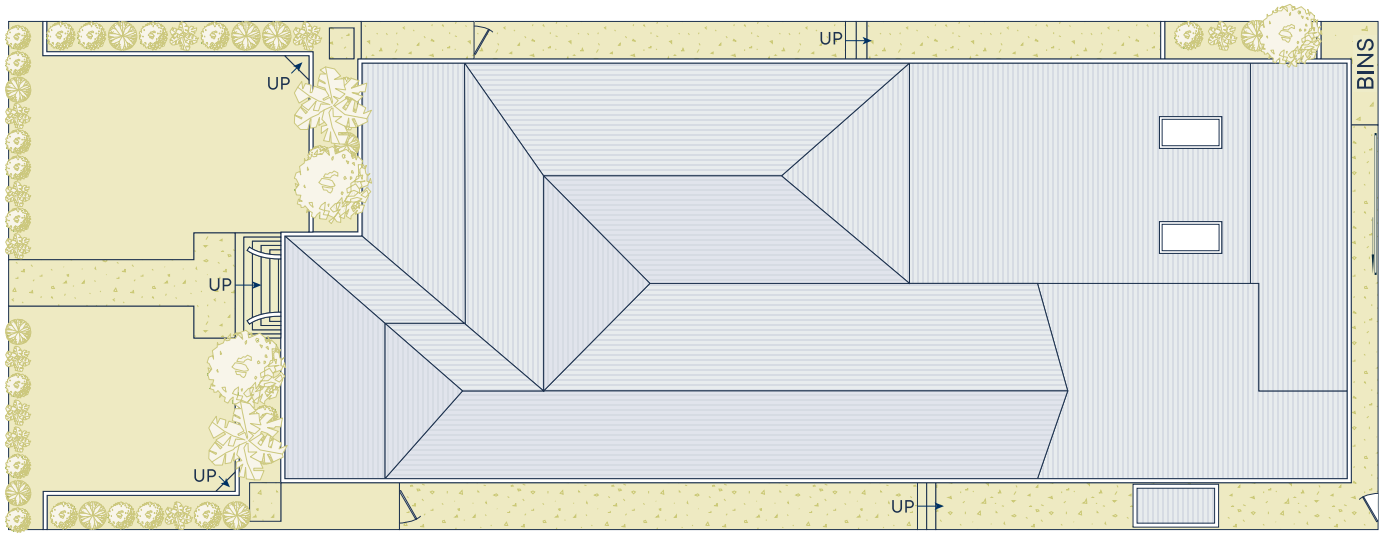

Site Plan



Attic



Size (approx)

- Internal (excl attic)215sqm
- External 271sqm
- Land Size 473sqm

Outgoings

- Water Rates $216p/q
- Council Rates $995p/q

DISCLAIMER: This information has been prepared as a guide only. The vendor and the real estate agent, Balmain Real Estate Pty Ltd and/or Balmain Estate Agency Pty Ltd (trading as Cobden & Hayson Balmain), make no warranties as to its accuracy and all interested parties must rely on their own enquiries.